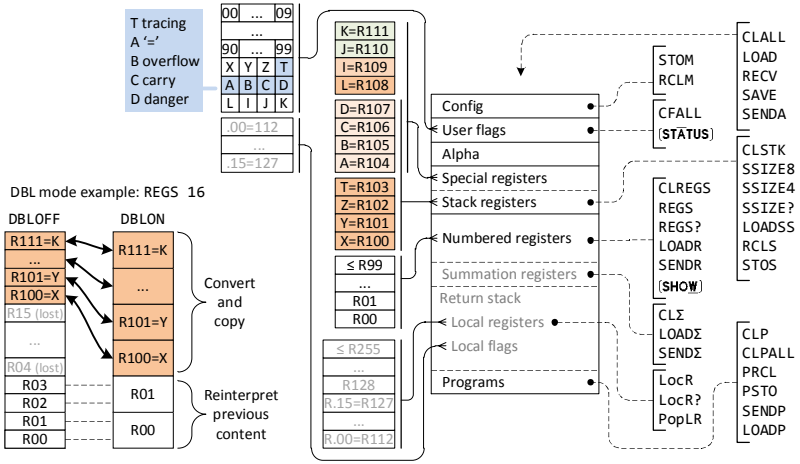
T tracing
A '='
B overflow
C carry
D danger
00 ... 09
90 ... 99
X Y Z T
A B C D
L I J K
.00=112
...
.15=127
K=R111
J=R110
I=R109
L=R108
D=R107
C=R106
B=R105
A=R104
T=R103
Z=R102
Y=R101
X=R100
≤ R99
...
R01
R00
≤ R255
...
R128
R.15=R127
...
R.00=R112
Config
User flags
Alpha
Special registers
Stack registers
Numbered registers
Summation registers
Return stack
Local registers
Local flags
Programs
STOM
RCLM
CFALL
(STATUS)
CLALL
LOAD
RECV
SAVE
SENDA
CLSTK
SSIZE8
SSIZE4
SSIZE?
LOADSS
RCLS
STOS
CLREGS
REGS
REGS?
LOADR
SENDR
(SHOW)
CLΣ
LOADΣ
SENDΣ
LocR
LocR?
PopLR
CLP
CLPALL
PRCL
PSTO
SENDP
LOADP
DBL mode example: REGS 16
DBLOFF
DBLON
R111=K
...
R101=Y
R100=X
R15 (lost)
...
R04 (lost)
R03
R02
R01
R00
R111=K
...
R101=Y
R100=X
R01
R00
Convert and copy
Reinterpret previous content